FARO BARCELONA

TAKE AWAY

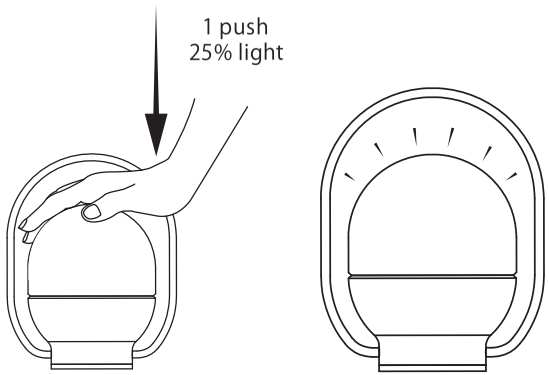

LED 0.5W 30LM 2700K 20 hours

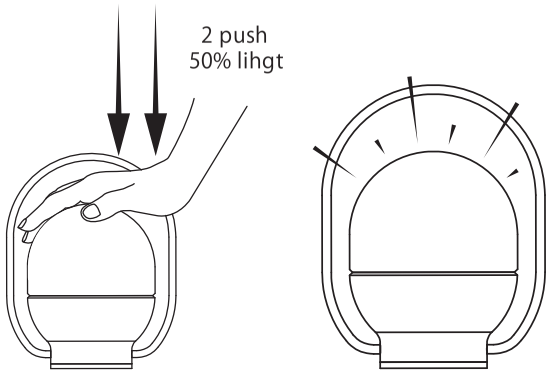

LED 1W 55LM 2700K 10 hours

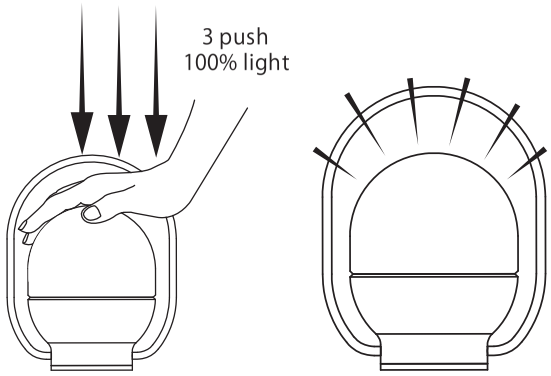

LED 1.5W 100LM 2700K 5 hours

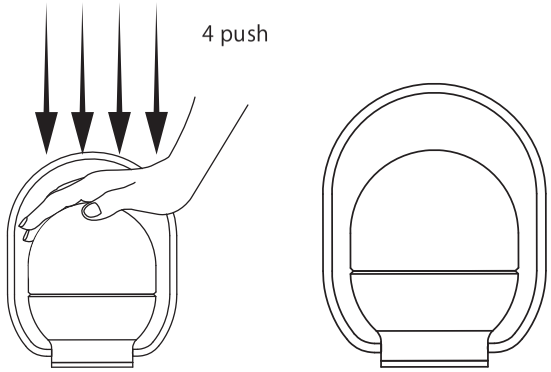

OFF

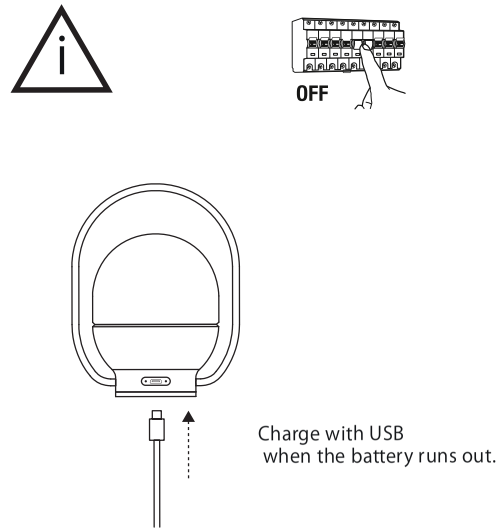

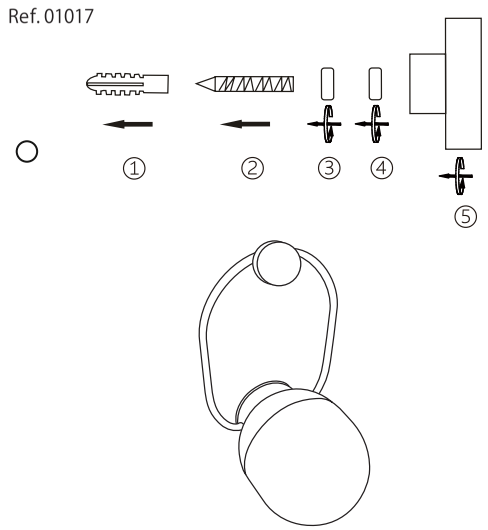

LED F	This product contains a light source of energy efficiency class F Este producto contiene una fuente luminosa de la clase eficiencia energética F	LED	repair service	Lifetime 30000 Hours		CE	EAC		UK CA	RoHS Compliant			RECYCLE

Together we take care of the planet

Built-in Rechargable Lithium Battery Non-replaceable	Battery 3.7V 2600mA	Storage Temp range ≧0ºC ~ 45ºC	Cycle life (300 cycles) ≧ 80% (battery capacity)	USB 5Vdc 1A line 1.2m incl	Battery charge time max 5 hr	Battery discharge time max 5 hr