FARO BARCELONA

KLEE

refs. 20065, 20066

①

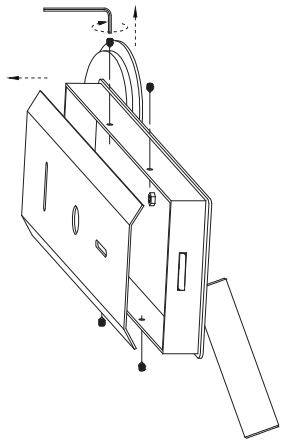

②

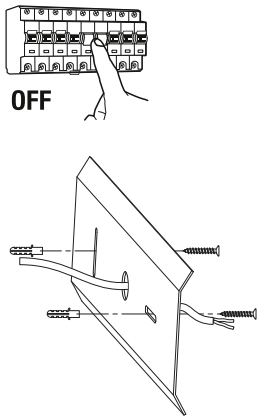

③

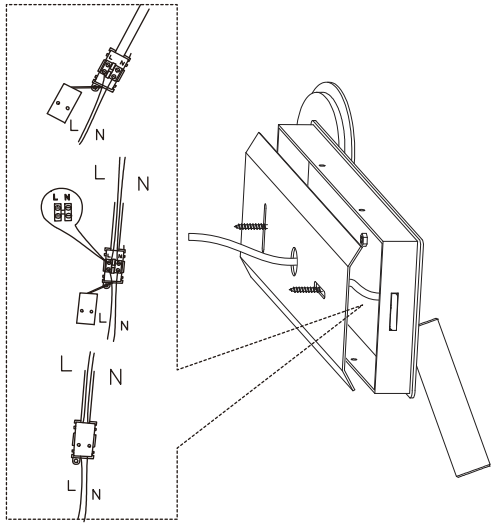

④

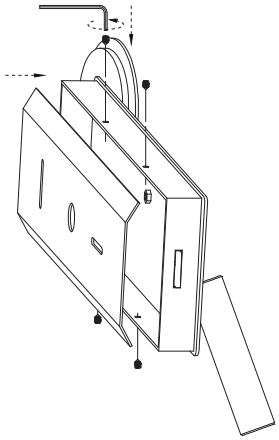

⑤

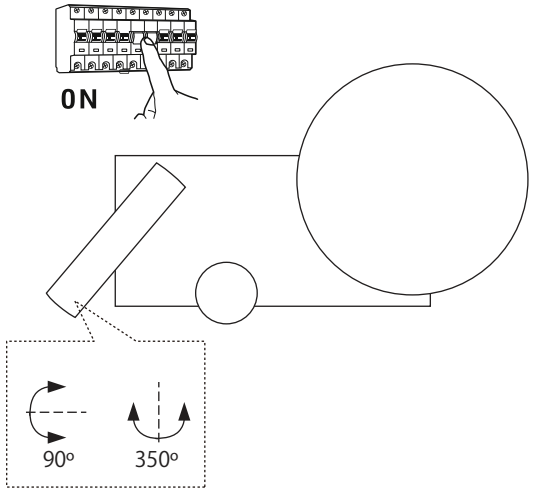

ⓘ Dual position

refs. 20065

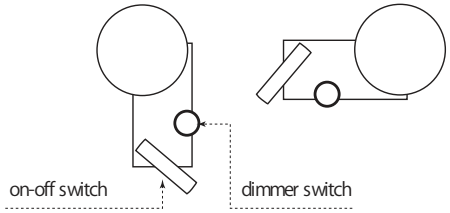

refs. 20066

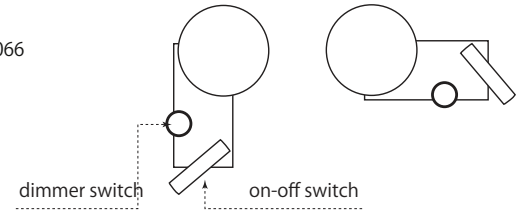

TECHNICAL FEATURES

COB LED 6~10W 2700K 690~1021Lm CRI90 350-500-700mA incl.

0,2m | 100-240 V~ | 50/60 Hz | LED | repair service | RoHS compliant | RECYCLE

Together we take care of the planet