FARO
BARCELONA

BOLLARD
for multiple shades

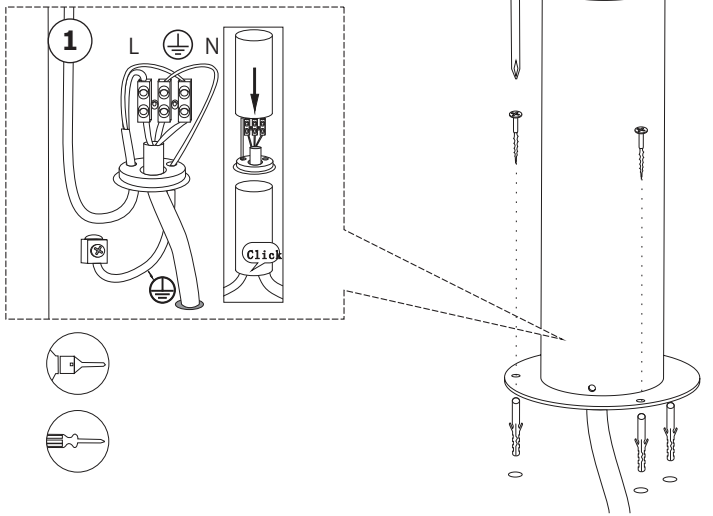

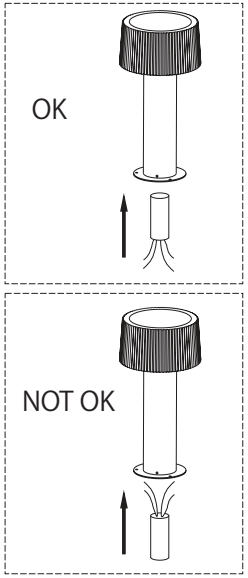

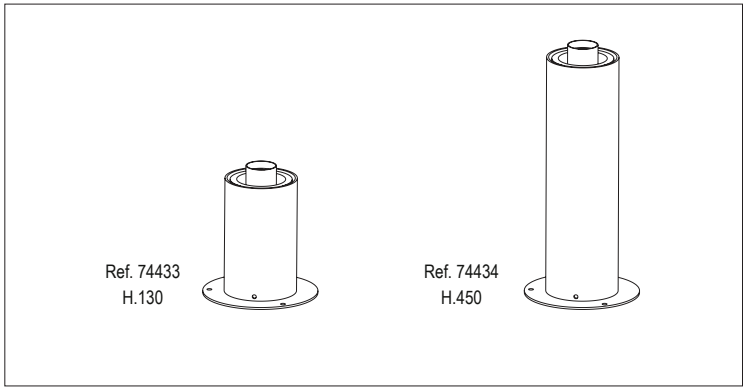

SHADE OPTIONS

See www.faro.es

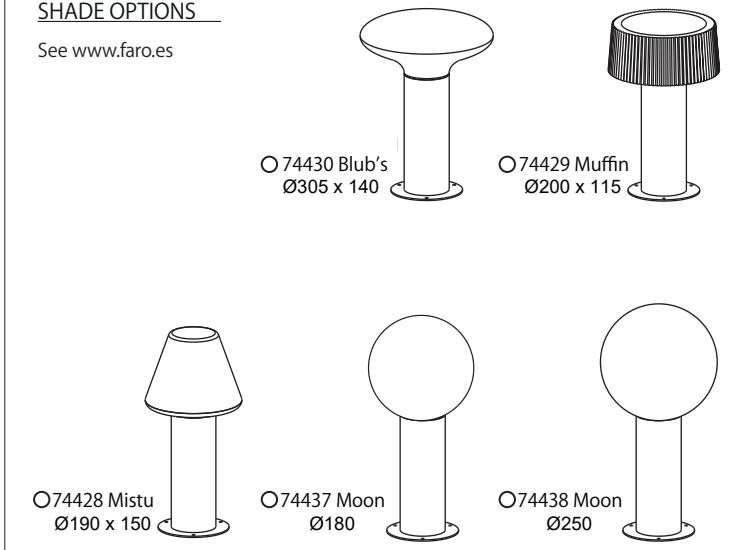

TECHNICAL FEATURES

1 X E26 5W LED no incl.

Together
we take care
of the planet